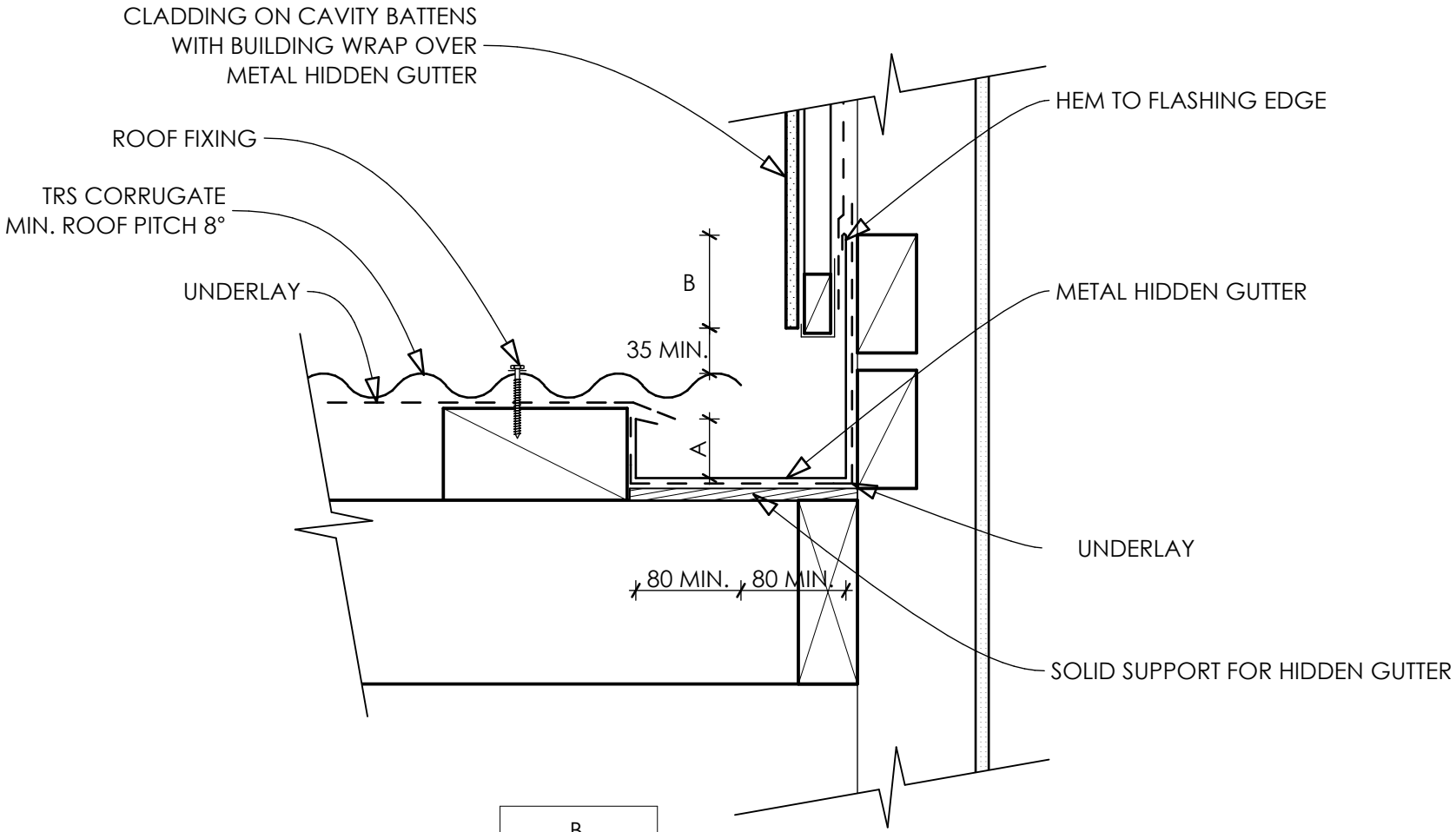

	B
LOW, MEDIUM OR HIGH WIND ZONE. ROOF PITCH ≥ 10°	75MM
VERY HIGH OR EXTRA WIND ZONE. ROOF PITCH < 10°	100MM

	A
ROOF PITCH ≥ 12°	20MM
ROOF PITCH < 12°	45MM

- These details are generally in accordance with E2/AS1 and or the NZ metal roof & wall caldding code of practice.
- The building designer/ Architect is ultimately responsible for details to meet the NZ Building Code & E2/AS1.
- For Further information please contact your nearest roofing store www.theroofingstore.co.nz.

The Roofing Store

P: HEAD OFFICE 09 277 2717
ALBANY 09 972 0060
KATIKAIT 07 549 5190
WELLINGTON 04 974 5792
CHRISTCHURCH 03 348 6528

WEB: www.theroofingstore.co.nz
Copyright © The Roofing Store 2013

DETAIL NUMBER: R-TRSC-05 SCALE: 1:5

TITLE: HIDDENGUTTER DETAIL